DOI: http://dx.doi.org/10.15407/techned2018.01.030

SIMULATION OF ELECTROMAGNETIC-ACOUSTIC CONVERSION PROCESS UNDER TORSION WAVES EXCITATION. Part 2

S.Yu. Plesnetsov[1*], O.N. Petrishchev[2], R.P. Mygushchenko[1], G.M. Suchkov[1]
[1] – **National Technical University "Kharkiv Polytechnic Institute",**
2, Kirpichova st., Kharkiv, 61002, Ukraine. E-mail: hpi.suchkov@gmail.com
[2] – **National Technical University of Ukraine "Igor Sikorsky Kyiv Polytechnic Institute",**
37, pr. Peremohy, Kyiv, 03056, Ukraine. E-mail: petrischev@ukr.net

Mathematical modeling of the electromagnetic-acoustic transducer (EMAT) for excitation of nondispersive torsional waves in tubular electrically conductive ferromagnetic hollow rods of small diameter is performed taking into account all the factors that determine the design of the EMAT. The solutions of the differential equation for the values of the electromagnetic fields formed by the high-frequency coil of the device in the gap between the transducer and the tubular ferromagnetic product are found. The results of the research can be used to simulate and design exciting EMATs for measuring, monitoring, and diagnostics in the energy, nuclear, chemical and other industries for ultrasonic test of ferromagnetic tubular products. References 6, Figures 4.
Key words: ultrasonic test, nondispersive torsional waves, mathematical simulation, electromagnetic-acoustic transducer, tubular product, wave characteristic of the transducer.

Introduction. The article is a continuation of paper [6] in which the differential equation of torsional oscillations in a hollow electrically conductive ferromagnetic (magnetostrictive) rod is formulated and the general solution for the object of research of infinite length, in which the running non-dispersive torsional waves exist, is given. The general solution is obtained by means of the Fourier integral transform [3] with respect to the z is the coordinate of the cylindrical coordinate system (ρ, υ, z), axis z of which is aligned with the axis of symmetry of the hollow rod. The study of the analytical solution of the differential equation and computer simulation gave a possibility to determine that when designing electromagnetic-acoustic transducers (EMATs) it is necessary to take into account the properties and characteristics of the interconnected geometric and material parameters of the transducer model and the material properties of the product that are physically one of the elements of the transducer along with the amplitude of the excited torsional waves at a given frequency. To ensure the possibility of creating EMAT for measurement, control, diagnostics and studying of physico-mechanical properties of tubular products, it is necessary to conduct researches of the obtained solutions of the differential equation and formulate recommendations on the choice of EMAT design options with predefined parameters and characteristics. This is also important from the point of view of power supply of the EMAT [2] with a generator that is compatible with it.

The aim of the work is to implement the study of the factors determining the rational design of the EMAT for ultrasonic test of non-dispersive torsional waves of hollow rods and small diameter tubes.

Content and results of research. To achieve this goal, it is necessary to find explicitly the solution of the formulated differential equation through step-by-step finding of the interrelated electromagnetic fields in various domains of the EMAT model, taking into account all the factors affecting the design of the transducer. To solve the problem, let us consider the design of a pass-through coil, electromagnetic-acoustic transducer, shown in Fig. 1. The term "pass-through coil transducer" means a physical system with distributed parameters. The transducer consists of a source *1* of an alternating magnetic field, a coil of N circular wire loops, a source *2* of a constant bias field located on the axis of the coil symmetry of the central conductor through which a constant current I_0 flows and a certain volume of the ferromagnetic hollow rod *3* in which the electromagnetic energy is converted into the energy of the elastic vibrations of the particles of the rod material.

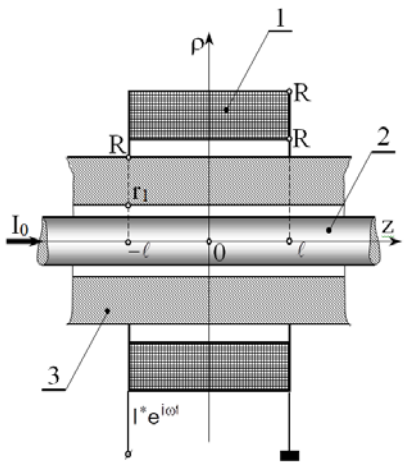

Fig. 1

ORCID ID: *http://orcid.org/0000-0001-8428-5426

Amplitude value of the linear density of external torque $\mu^*(z)$ in the paper [6] is determined by the following expression

$$\mu^*(z) = \frac{(m_1 - m_2)}{2} I_0 \left[R\, H_\rho^*(R, z) - r_1\, H_\rho^*(r_1, z) + \int_{r_1}^{R} \rho\, div\, \vec{H}^*(\rho, z) d\rho \right], \tag{1}$$

where m_1 and m_2 are the magnetostrictive constants; $H_\rho^*(\rho, z)$ ($\rho = R$; r_1) is the amplitude value of the radial component of the tension vector $\vec{H}^*(\rho, z)$ of the alternating magnetic field of the coil that exists in the volume and on the surface of the hollow ferromagnetic rod and varies in time according to the law $e^{i\omega t}$.

The integral for definition of the angles of rotation $\Phi^{(\pm)}$ of the cross sections of the rod has the meaning of the Fourier integral transform [3] and can be determined as:

$$\mu^*(\pm k_s) = \int_{-\infty}^{\infty} \mu^*(z) e^{\pm i k_s z} dz\,. \tag{2}$$

Components of the amplitude value of the tension vector $\vec{H}^*(\rho, z)$ of the alternating magnetic field of the coil in the volume of the ferromagnetic rod, as characteristics of the field of the physically realized source, should satisfy the limiting conditions

$$\lim_{L \to \infty} \left\{ H_\beta^*(\rho, z), \frac{\partial H_\beta^*(\rho, z)}{\partial \beta} \right\} = 0\,, \qquad \beta = (\rho, z), \tag{3}$$

where $L = \sqrt{\rho^2 + z^2}$ is the distance from the field source. Subjecting the right side of expression (1) to the Fourier integral transform (2), and taking into account the conditions of physical realizability of the field source, that is, the limiting conditions (3), we obtain the following result

$$\mu^*(\pm k_s) = \frac{(m_1 - m_2)}{2} I_0 \left\{ R H_\rho^*(R, \pm k_s) - r_1 H_\rho^*(r_1, \pm k_s) + \right.$$
$$\left. + \int_{r_1}^{R} \rho \left[\frac{1}{\rho} H_\rho^*(\rho, \pm k_s) + \frac{\partial H_\rho^*(\rho, \pm k_s)}{\partial \rho} \mp i k_s H_z^*(\rho, \pm k_s) \right] d\rho \right\}, \tag{4}$$

where

$$H_\beta^*(\rho, \pm k_s) = \int_{-\infty}^{\infty} H_\beta^*(\rho, z) e^{\pm i k_s z} dz\,, \ \beta = (\rho, z) \tag{5}$$

is the integral image of amplitude value of the β-th component of the vector magnetic intensity of the coil in the volume of the ferromagnetic rod.

To determine the angles of rotation $\Phi^{(\pm)}$ of the cross sections, it is necessary to determine the integral images $H_\rho^*(\rho, \pm k_s)$ and $H_z^*(\rho, \pm k_s)$ of the intensity vector components of the alternating magnetic field of the coil in the volume of the ferromagnetic rod.

When performing calculations, it is expedient to divide the infinite domain ($0 \le \rho < \infty$, $-\infty < z < \infty$) into subdomains (Fig. 1):

- domain No 1 ($R \le \rho < \infty$, $0 \le \vartheta \le 2\pi$, $-\infty < z < \infty$) with air gap under coil loops;
- domain No 2 ($r_1 \le \rho \le R$, $0 \le \vartheta \le 2\pi$, $-\infty < z < \infty$) with volume of an electrically conductive ferromagnetic tube;
- domain No 3 ($R_0 \le \rho \le r_1$, $0 \le \vartheta \le 2\pi$, $-\infty < z < \infty$) with air gap between the inner surface of the tube and the lateral surface of the electric current conductor;
- domain No 4 ($0 \le \rho \le R_0$, $0 \le \vartheta \le 2\pi$, $-\infty < z < \infty$) with volume of the electric current conductor.

1. Calculation of the magnetic field in the air gap under the coil and determination of the wave characteristic of the alternating magnetic field source

In the domain No 1, there are external electric currents (alternating current in coil loops), whose sur-

face density vector $\vec{J}^*(\rho,z)e^{i\omega t}$ is completely determined by the circumferential component $J_\vartheta^*(\rho,z)e^{i\omega t}$. Its amplitude value is calculated by the formula

$$J_\vartheta^*(\rho,z)=\frac{I^*N}{2\ell(R_2-R_1)}f_1(\rho)f_3(z), \tag{6}$$

where I^* is the amplitude of alternating current; N is the number of loops in the coil; 2ℓ, R_2 and R_1 are the dimensions of the cross section of the coil; $f_1(\rho)$ and $f_3(z)$ are the regulatory functions, where

$$f_1(\rho)=\begin{cases}1\,\forall\,\rho\in[R_1,R_2],\\ 0\,\forall\,\rho\notin[R_1,R_2],\end{cases}\qquad f_3(z)=\begin{cases}1\,\forall\,z\in[-\ell,\ell],\\ 0\,\forall\,z\notin[-\ell,\ell].\end{cases}$$

The amplitude value $\vec{H}^{(1)}(\rho,z)$ of the intensity vector of the alternating magnetic field of the coil in the domain No 1 satisfies the Maxwell equation, which, neglecting the displacement currents (they are several orders smaller than the external electric currents), is written as follows

$$rot\,\vec{H}^{(1)}(\rho,z)=\vec{J}^*(\rho,z). \tag{7}$$

In order that the condition for the absence of magnetic charges be satisfied, that is, condition $div\,\vec{B}^{(1)}(\rho,z)=0$, where $\vec{B}^{(1)}(\rho,z)=\mu_0\vec{H}^{(1)}(\rho,z)$ is the amplitude value of the magnetic induction vector of the alternating magnetic field of the coil in the domain No 1; $\mu_0=4\pi\cdot10^{-7}$ H/m is the magnetic permeability of vacuum, we introduce the vector potential $\vec{A}(\rho,z)e^{i\omega t}$. It shall be such that $rot\,\vec{A}(\rho,z)=\vec{B}^{(1)}(\rho,z)=\mu_0\vec{H}^{(1)}(\rho,z)$. Substituting the last relation into the Maxwell equation (7), we obtain the equation for the vector potential of the alternating magnetic field in the domain No 1

$$rot\,rot\,\vec{A}(\rho,z)=\mu_0\vec{J}^*(\rho,z). \tag{8}$$

The solution of equation (8) must satisfy the condition of physical realizability of the source of the magnetic field, that is, it must ensure the fulfillment of the following limiting conditions

$$\lim_{L_1\to\infty}\left\{\vec{A}(\rho,z),\frac{\partial\vec{A}(\rho,z)}{\partial\rho},\frac{\partial\vec{A}(\rho,z)}{\partial z}\right\}=0, \tag{9}$$

where $L_1=\sqrt{\rho^2+z^2}$ is the distance from the source of the alternating magnetic field in the domain No 1.

It is easy to verify that for an axisymmetric (independent of the circumferential coordinate ϑ) alternating magnetic field of the coil, equation (8) takes the following form

$$-\frac{\partial^2A_\vartheta(\rho,z)}{\partial z^2}-\frac{\partial^2A_\vartheta(\rho,z)}{\partial\rho^2}-\frac{1}{\rho}\frac{\partial A_\vartheta(\rho,z)}{\partial\rho}+\frac{1}{\rho^2}A_\vartheta(\rho,z)=J_\vartheta^*(\rho,z), \tag{10}$$

where $A_\vartheta(\rho,z)$ is the circumferential component of the vector potential, which, as follows from the limiting conditions (9), must satisfy the limiting conditions of an analogous form, that is

$$\lim_{L_1\to\infty}\left\{A_\vartheta(\rho,z),\frac{\partial A_\vartheta(\rho,z)}{\partial\rho},\frac{\partial A_\vartheta(\rho,z)}{\partial z}\right\}=0. \tag{11}$$

The conditions of physical realizability (11) make it possible to apply the integral transformation (5) to solve equation (10). We introduce the function

$$A_\vartheta(\rho,\pm k_s)=\int_{-\infty}^{\infty}A_\vartheta(\rho,z)e^{\pm ik_sz}dz. \tag{12}$$

The function $A_\vartheta(\rho,\pm k_s)$ is an integral transform of the amplitude value of the circular component of the vector potential of the alternating magnetic field of the coil in the domain No 1.

Applying the integral transformation (12) to the left and right sides of the differential equation (10), we bring it to an ordinary differential equation of the following form

$$\rho^2\frac{\partial^2A_\vartheta(\rho,\pm k_s)}{\partial\rho^2}+\rho\frac{\partial A_\vartheta(\rho,\pm k_s)}{\partial\rho}-[(\rho\gamma)^2+1]A_\vartheta(\rho,\pm k_s)=-\rho^2J_\vartheta^*(\rho,\pm k_s), \tag{13}$$

where $J_\vartheta^*(\rho,\pm k_s)=\dfrac{\mu_0I^*N}{(R_2-R_1)}\dfrac{\sin k_s\ell}{k_s\ell}f_1(\rho)$.

We seek the solution of equation (13) in the following form

$$A_{\vartheta}(\rho,\pm k_s) = [A + A(\rho)]I_1(k_s\rho) + [B + B(\rho)]K_1(k_s\rho)\,, \tag{14}$$

where A and B are the constants; $A(\rho)$ and $B(\rho)$ are the varying constants that form a particular solution of the inhomogeneous equation (13) and satisfy the conditions of a minimal number of computations, that is

$$A'(\rho)I_1(k_s\rho) + B'(\rho)K_1(k_s\rho) = 0\,; \tag{15}$$

the prime in condition (15) denotes the first derivative in the radial coordinate ρ; $I_1(k_s\rho)$ and $K_1(k_s\rho)$ is the modified Bessel function and the McDonald's function of the first order, respectively.

We define the derivatives of the integral transform of the circumferential component of the vector potential $A_{\vartheta}(\rho,\pm k_s)$ entering into equation (13). After calculating the condition (15), we obtain

$$\frac{\partial A_{\vartheta}(\rho,\pm\gamma)}{\partial\rho} = [A + A(\rho)]\left[\gamma I_0(\gamma\rho) - \frac{1}{\rho}I_1(\gamma\rho)\right] - [B + B(\rho)]\left[\gamma K_0(\gamma\rho) + \frac{1}{\rho}K_1(\gamma\rho)\right];$$

$$\frac{\partial^2 A_{\vartheta}(\rho,\pm k_s)}{\partial\rho^2} = [A + A(\rho)]\left\{k_s^2 I_1(k_s\rho) + \frac{2}{\rho^2}I_1(k_s\rho) - \frac{k_s I_0(k_s\rho)}{\rho}\right\} + A'(\rho)\left[k_s I_0(k_s\rho) - \frac{1}{\rho}I_1(k_s\rho)\right] +$$

$$+[B + B(\rho)]\left\{k_s^2 K_1(k_s\rho) + \frac{2}{\rho^2}K_1(k_s\rho) + \frac{k_s K_0(k_s\rho)}{\rho}\right\} - B'(\rho)\left[k_s K_0(k_s\rho) + \frac{1}{\rho}K_1(k_s\rho)\right].$$

Substituting the derivative of the function $A_{\vartheta}(\rho,\pm k_s)$ and the supposed form of the solution (14) into equation (10), we obtain

$$k_s A'(\rho)I_0(k_s\rho) - k_s B'(\rho)K_0(k_s\rho) = -J_{\vartheta}^*(\rho,\pm k_s). \tag{16}$$

Condition (15) and equation (16) form an algebraic system of equations with respect to the first derivatives of varying constants. The determinant D of this system of equations has the form

$$D = \begin{vmatrix} I_1(k_s\rho) & K_1(k_s\rho) \\ k_s I_0(k_s\rho) & -k_s K_0(k_s\rho) \end{vmatrix} = -k_s[I_1(k_s\rho)K_0(k_s\rho) + I_0(k_s\rho)K_1(k_s\rho)].$$

Since the Wronskian modified cylindrical functions $I_1(k_s\rho)K_0(k_s\rho) + I_0(k_s\rho)K_1(k_s\rho) = 1/(k_s\rho)$ [3], then the determinant $D = -1/\rho$, and the sought derivatives are written in the form

$$A'(\rho) = -\rho J_{\vartheta}^*(\rho,\pm k_s)K_1(k_s\rho), \quad B'(\rho) = \rho J_{\vartheta}^*(\rho,\pm k_s)I_1(k_s\rho). \tag{17}$$

Integrating the left and right sides of relations (17), we obtain the calculated formulas for varying coefficients $A(\rho)$ and $B(\rho)$

$$A(\rho) = -\int_R^{\rho} x J_{\vartheta}^*(x,\pm k_s)K_1(k_s x)dx = -\frac{\mu_0 I^* N}{R_2 - R_1}\frac{\sin k_s\ell}{k_s\ell}\int_{R_1}^{\rho} x K_1(k_s x)dx\,, \tag{18}$$

$$B(\rho) = \int_R^{\rho} x J_{\vartheta}^*(x,\pm k_s)I_1(k_s x)dx = \frac{\mu_0 I^* N}{R_2 - R_1}\frac{\sin k_s\ell}{k_s\ell}\int_{R_1}^{\rho} x I_1(k_s x)dx\,. \tag{19}$$

From the expressions (18) and (19) it follows that in the air gap between the coil loops and a ferromagnetic surface of the hollow rod $A(\rho) = B(\rho) = 0\,\forall\,\rho\in[R, R_1]$.

The conditions of physical realizability of the source of an alternating magnetic field dictate the necessity of fulfilling the following limiting condition

$$\lim_{\rho\to\infty} A_{\vartheta}(\rho,\pm k_s) = 0\,. \tag{20}$$

In order to satisfy condition (20), it is necessary and sufficient to determine the constant A in the solution (14) as follows

$$A = A_0 = -A(R_2) = \frac{\mu_0 I^* N}{R_2 - R_1}\frac{\sin k_s\ell}{k_s\ell}\int_{R_1}^{R_2}\rho K_1(k_s\rho)d\rho = \frac{\mu_0 I^* N}{k_s}W_{\kappa}(\ell, R, k_s), \tag{21}$$

where $W_{\kappa}(\ell, R, k_s)$ is the wave characteristic of the source of an alternating magnetic field, i.e., coils, that is

$W_\kappa(\ell, R, k_s) = \dfrac{\sin k_s \ell}{k_s \ell} R(k_s)$; the function $R(k_s)$ determines the influence of the thickness of coil loops packing on the amplitude of the excited torsional waves. The numerical values of the function $R(k_s)$ are determined by

$$R(k_s) = \frac{\pi}{2(1 - R_1/R_2)}\left[\Xi(k_s R_2) - \frac{R_1}{R_2}\Xi(k_s R_1)\right],$$

$$\Xi(k_s R_j) = K_1(k_s R_j)\mathbf{L}_0(k_s R_j) + K_0(k_s R_j)\mathbf{L}_1(k_s R_j);\ j = 1;2\,.$$

Here $\mathrm{L}_\nu(k_s R_j)$ is the modified Struve function of order $\nu = 0;1$. The numerical values of the modified Struve function $\mathrm{L}_\nu(z)$ are given by the integral expression [1]

$$\mathbf{L}_\nu(z) = \frac{2(z/2)^\nu}{\sqrt{\pi}\,\Gamma(\nu + 1/2)} \int_0^{\pi/2} sh(z\cos\vartheta)\sin^{2\nu}\vartheta\, d\vartheta, \qquad \mathrm{Re}\,\nu > -1/2, \tag{22}$$

where $\Gamma(\nu + 1/2)$ is the gamma function. Fig. 2 shows the graphs of modified Struve functions of orders $\nu = 0,1,...,4$, whose numerical values were calculated by formula (22).

Figs. 3 and 4 show the nature of the change in the modulus of the function $W_\kappa(\ell, R, k_s)$ for two fixed coil lengths $\ell = 0$ (Fig. 3) and $\ell = R$ (Fig. 4). The smaller radius of coil loops packing $R_1 = 1{,}05\,R$. The variable parameter of the radius in Figs. 3 and 4 is the family of curves $R_2 = [1{,}051 + 0{,}5(n-1)]R$, where n is the curve number.

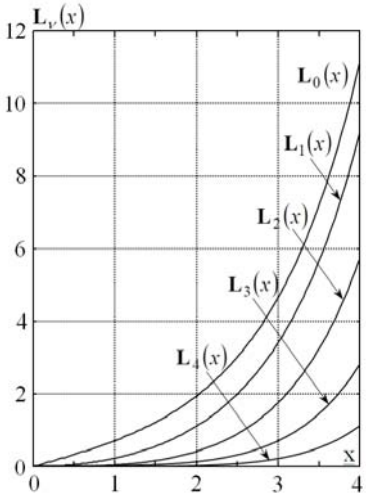

Fig. 2

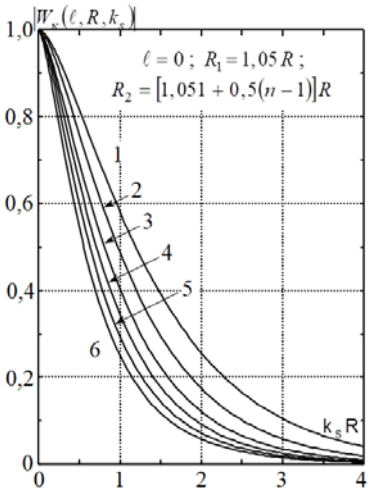

Fig. 3

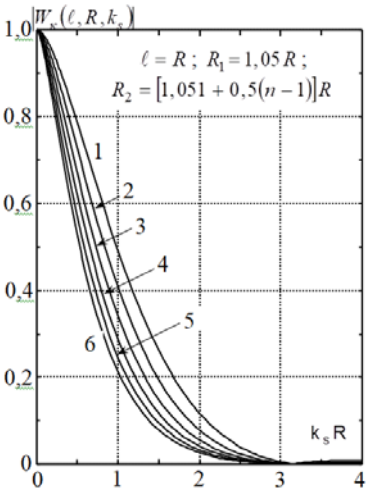

Fig. 4

From the analysis of the data given, it follows that an increase in the size of the coil results in a narrowing of the frequency bands in which effective excitation of torsional ultrasonic waves occurs. The narrowing of the frequency bands is due to the fact that with increasing transverse size of the coil, the degree of delocalization of its magnetic field in space increases and, as a result, the linear dimensions of the region of action of the alternating magnetic field on the rod increase, so the conclusions obtained in paper [6] are confirmed.

Therefore, based on analysis of the data given in paper [6], it can be concluded that the physical nature of the wave characteristics $W_\kappa(\ell, R, k_s)$ of the source of the alternating magnetic field in the electromagnetic transducer can be interpreted as the coefficient of interference losses of the excitation efficiency of torsional waves that are inherent in all electro-acoustic transducers [4, 5]. This is because ultrasonic transducers are devices with a distributed mechanical output in space.

In the air gap under the coil, the vector potential $A_\vartheta(\rho, \pm k_s)$ is determined by the following expression

$$A_\vartheta(\rho, \pm k_s) = A_0 I_1(k_s \rho) + B\,K_1(k_s \rho), \tag{23}$$

where B is the constant to be determined.

From the definition of the vector potential it follows that

$$H_{\rho}^{(1)}(\rho,z) = -\frac{1}{\mu_0}\frac{\partial A_{\vartheta}(\rho,z)}{\partial z}, \qquad H_{z}^{(1)}(\rho,z) = \frac{1}{\mu_0}\left[\frac{1}{\rho}A_{\vartheta}(\rho,z) + \frac{\partial A_{\vartheta}(\rho,z)}{\partial \rho}\right]. \tag{24}$$

Applying the integral transformation (12) to the left and right sides of relations (24), we obtain the following expressions:

$$H_{\rho}^{(1)}(\rho,\pm k_s) = \pm\frac{ik_s}{\mu_0}A_{\vartheta}(\rho,\pm k_s), \quad H_{z}^{(1)}(\rho,\pm k_s) = \frac{1}{\mu_0}\left[\frac{1}{\rho}A_{\vartheta}(\rho,\pm k_s) + \frac{\partial A_{\vartheta}(\rho,\pm k_s)}{\partial \rho}\right]. \tag{25}$$

Substituting expression (23) into (25), we obtain formulas for calculating the integral transform of the components of the vector of the alternating magnetic intensity under the coil in the domain $R \le \rho \le R_1$

$$H_{\rho}^{(1)}(\rho,\pm k_s) = \pm i I^* N W_{\kappa}(\ell,R,k_s) I_1(k_s\rho) \pm \frac{ik_s}{\mu_0} B K_1(k_s\rho),$$

$$H_{z}^{(1)}(\rho,\pm k_s) = I^* N W_{\kappa}(\ell,R,k_s) I_0(k_s\rho) - \frac{k_s}{\mu_0} B K_0(k_s\rho). \tag{26}$$

In addition to wave losses, in real electromagnetic transducers, there are losses associated with the reduction in the efficiency of excitation of elastic waves, which are caused by eddy currents. To determine the loss factor for eddy currents, it is necessary to investigate the alternating magnetic fields in the volume of an electrically conductive ferromagnetic tube in the air gap between the inner surface of the tube and the lateral surface of the electric current conductor and in the volume of the electric current conductor.

Conclusions. The mathematical modeling of the pass-through electromagnetic-acoustic transducer for excitation of torsional non-dispersive elastic oscillations in tubular-like ferromagnetic products is performed taking into account the characteristics of the transducer, the properties of the object under study, and the relative location of the EMAT and the product. The necessity of step-by-step finding of coupled electromagnetic fields in various areas of the EMAT model is shown taking into account all the factors influencing on the design of the pass-through transducer. A solution of the general differential equation is found by determining the electromagnetic fields values in the region between the exciter coil of the preamplifier and the tubular product. The wave characteristic of the alternating magnetic field source of EMAT is determined.

It is defined that an increase in the dimensions of the high-frequency coil of the transducer leads to a narrowing of the band of excited frequencies, in which an effective excitation of torsional ultrasonic waves occurs.

1. A handbook on special functions with formulas, graphs and mathematical tables. Moskva: Nauka, 1979. 832 p. (Rus)

2. Bolyuh V.F., Oleksenko S.V., Schukin I.S. Comparative analysis of linear pulse electromechanical transducers of electromagnetic and induction types. *Tekhnichna Elektrodynamika*. 2016. No 5. Pp. 46-48. (Rus)

3. Koshlyakov N. S., Gliner E. B., Smirnov M. M. Equations in partial derivatives of mathematical physics. Moskva: Vysshaia shkola, 1970. 710 p. (Rus)

4. Mygushchenko R.P., Suchkov G.M., Petrischev O.N., Desyatnichenko A.V. Theory and practice of electromagnetic-acoustic control. Part 5. Features of designing and practical application of EMA devices for ultrasonic test of metal products. Kharkov: TOV Planeta-print, 2016 230 p. (Rus)

5. Ermolov I.N., Lange Yu.V. Nondestructive testing: Handbook: Vol. 3: Ultrazvukovoi kontrol. Moskva: Mashinostroenie, 2006. 864 p. (Rus)

6. Plesnetsov S.Yu., Petrischev O.N., Mygushchenko R.P., Suchkov G.M. Simulation of electromagnetic-acoustic conversion process under torsion waves excitation. *Tekhnichna Elektrodynamika*. 2017. No 3. Pp. 79–88. (Rus)

УДК 620.179.16: 620.179.17

МОДЕЛИРОВАНИЕ ПРОЦЕССА ЭЛЕКТРОМАГНИТНО-АКУСТИЧЕСКОГО ПРЕОБРАЗОВАНИЯ ПРИ ВОЗБУЖДЕНИИ КРУТИЛЬНЫХ ВОЛН. ЧАСТЬ 2

С.Ю. Плеснецов[1], канд.техн.наук, **О.Н. Петрищев**[2], докт.техн.наук, **Р.П. Мигущенко**[1], докт.техн. наук, **Г.М. Сучков**[1], докт.техн.наук

[1] **Национальный технический университет «Харьковский политехнический институт», ул. Кирпичова, 2, Харьков, 61002, Украина. E-mail: hpi.suchkov@gmail.com**

[2] **Национальный технический университет Украины «Киевский политехнический институт им. И. Сикорского», пр. Победы, 37, Киев, 03056, Украина.**

Выполнено математическое моделирование электромагнитно-акустического преобразователя для возбуждения недиспергирующих крутильных волн в трубчатых электропроводных ферромагнитных полых стержнях малого диаметра с учетом всех факторов, определяющих конструкцию ЭМАП. Найдены решения дифференциального уравнения для величин электромагнитных полей, формируемых высокочастотной катушкой устройства в зазоре между преобразователем и трубчатым ферромагнитным изделием. Результаты исследований могут быть использованы для моделирования и конструирования возбуждающих ЭМАП для средств измерений, контроля, диагностики в энергетической, атомной, химической и других областях промышленности при ультразвуковых исследованиях ферромагнитных изделий трубчатого типа. Библ. 6, рис. 4.

Ключевые слова: ультразвуковой, недиспергирующие крутильные волны, математическое моделирование, электромагнитно-акустический преобразователь, трубчатое изделие, волновая характеристика преобразователя.

1. Справочник по специальным функциям с формулами, графиками и математическими таблицами. М.: Наука, 1979. 832 с.

2. Болюх В.Ф., Олексенко С.В., Щукин И.С. Сравнительный анализ линейных импульсных электромеханических преобразователей электромагнитного и индукционного типов. *Техн. електродинаміка*. 2016. № 5. С. 46–48.

3. Кошляков Н.С., Глинер Э.Б., Смирнов М.М. Уравнения в частных производных математической физики. М.: Высшая школа, 1970. 710 с.

4. Мигущенко Р.П., Сучков Г.М., Петрищев О.Н., Десятниченко А.В. Теория и практика электромагнитно-акустического контроля. Часть 5. Особенности конструирования и практического применения ЭМА устройств ультразвукового контроля металлоизделий. Харьков: ТОВ Планета-принт, 2016 230 с.

5. Ермолов И.Н., Ланге Ю.В. Неразрушающий контроль: Справочник: В 8 т. Т.3: Ультразвуковой контроль. М.: Машиностроение, 2006. 864 с.

6. Плеснецов С.Ю., Петрищев О. Н., Мигущенко Р.П., Сучков Г. М. Моделирование процесса электромагнитно – акустического преобразования при возбуждении крутильных волн. *Технічна електродинаміка*. 2017. № 3. С. 79–88.

УДК 620.179.16: 620.179.17

МОДЕЛЮВАННЯ ПРОЦЕСУ ЕЛЕКТРОМАГНІТНО-АКУСТИЧНОГО ПЕРЕТВОРЕННЯ ПРИ ЗБУДЖЕННІ КРУТИЛЬНИХ ХВИЛЬ. ЧАСТИНА 2

С.Ю. Плєснецов[1], канд.техн.наук, **О.М. Петрищев**[2], докт.техн.наук, **Р.П. Мигущенко**[1], докт.техн.наук, **Г.М. Сучков**[1], докт. техн. наук.

[1] **Національний технічний університет «Харківський політехнічний інститут», вул. Кирпичова, 2, Харків, 61002, Україна. E-mail: hpi.suchkov@gmail.com**

[2] **Національний технічний університет України «Київський політехнічний інститут ім. І.Сікорського”,», пр. Перемоги, 37, Київ, 03056, Україна.**

Виконано математичне моделювання електромагнітно-акустичного перетворювача для збудження недиспергуючих крутильних хвиль у трубчастих електропровідних феромагнітних стрижнях малого діаметра з урахуванням усіх факторів, що визначають конструкцію ЕМАП. Знайдено рішення диференціального рівняння для величин електромагнітних полів, що формуються високочастотною котушкою пристрою в зазорі між перетворювачем і трубчастим феромагнітним виробом. Результати досліджень можуть бути використані для моделювання та конструювання збуджуючих ЕМАП для засобів вимірювань, контролю, діагностики в енергетичній, атомній, хімічній та інших галузях промисловості при ультразвукових дослідженнях феромагнітних виробів трубчастого типу. Бібл. 6, рис. 4**.**

Ключові слова: ультразвуковий, недиспергуючі крутильні хвилі, математичне моделювання, електромагнітно-акустичний перетворювач, трубчастий виріб, хвильова характеристика перетворювача.

Надійшла 19.07.2017
Остаточний варіант 10.10.2017